EUROMOLD

INTERFACE C

Medium Voltage Symmetrical Separable Connectors

Catalogue 2026

Nexans
ELECTRIFY THE FUTURE

NEXANS POWER ACCESSORIES

An essential cog in energy systems

The future will be electric. The present already is. As electrification gathers spaces, network operators are undertaking large-scale projects to extend and modernize the grids. These projects require a wide range of power accessories. Nexans is a leading manufacturer and distributor in this field since more than 60 years, supplying a full range of power accessories to our global customers in about 100 countries.

We connect all types of cables, for high- and medium-voltage installations, and all types of conductors with any cross-section. We provide underground cable junctions, and connect cables to various types of equipment, including transformers and switchgear. Our products are used on both onshore and offshore networks, on wind and solar farms, or in data centers for example.

Our range of products includes EUROMOLD connectors, our cutting-edge EPDM technology, known for its exceptional performance and reliability. We also provide cold and heat shrinkable joints and terminations, developed to be always easier to install and reliable. We pre-assemble ready to install jumpers. And our extensive range of GPH ferrules and lugs, designed to meet the highest standards of quality and durability, are embodied in all our accessories kits or delivered separately.

Nexans is committed to delivering innovative solutions and top-notch products in the field of electrical connections and accessories.

Together, we have the power to electrify the future!

Laboratory accreditation

Since June 2000, Nexans independent ELAB laboratory obtained the BELAC accreditation no.144-TEST conform with the European standards for laboratories ISO 17025 for electrical testing of low and medium voltage cable accessories according to the international standards EN 50393, IEC 60502-4, IEC 61442 and HD 629.

ISO 9001 Certificate

Since 1992, Nexans commitment to quality is demonstrated by its ISO 9001 certification.

At Nexans, we are proud of our manufacturing and kitting sites

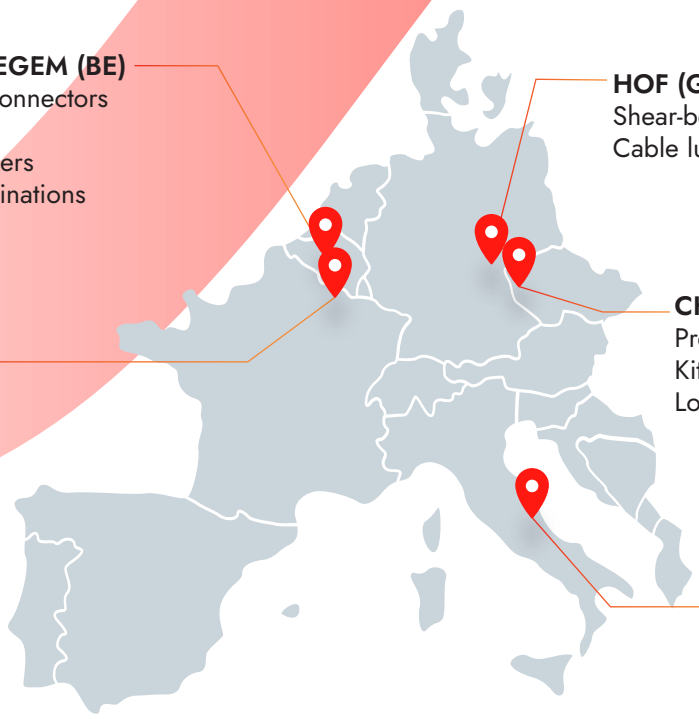

EREMBODEGEM (BE)
Separable connectors
Bushings
Surge arresters
Slip-on terminations

HOF (GE)
Shear-bolt connectors
Cable lugs

CHEB (CZ)
Pre-assembled jumpers
Kitting
Logistic center

DONCHERY (FR)
Cold shrink joints
Cold shrink terminations

OFFIDA (IT)
Heat shrink joints
Heat shrink termiations
Mastics

Medium voltage separable connectors

- Produced in **Europe**
- 100% routine tested
- Only high-quality material is used
- **Made 100% of EPDM rubber**
- All connectors are tested conform to the CENELEC **HD629.1** standard. Test reports available upon demand
- Degree of protection **IP67**: dust tight & immersion in water

- A complete range **(12 kV - 72 kV)**
- For coss sections from **95 mm² to 1200 mm²**
- Temperature range from **-60°C to +130°C**
- A range of associated coupling connectors and surge arresters all with compact design
- Offers many test options: capacitive test point, cable tests …

SYMMETRICAL SEPARABLE CONNECTORS
INTERFACE C

TABLE OF CONTENTS

400TB - tee connector
440TB - tee connector
440PB - coupling connector
400PB - 10SA - surge arrester
400TR - test rod
400TK and 400SW installation tools
Accessories
Possible arrangements

INTERFACE C1 & C2

Dimensions according to European CENELEC EN 50180 and 50181 (in mm).

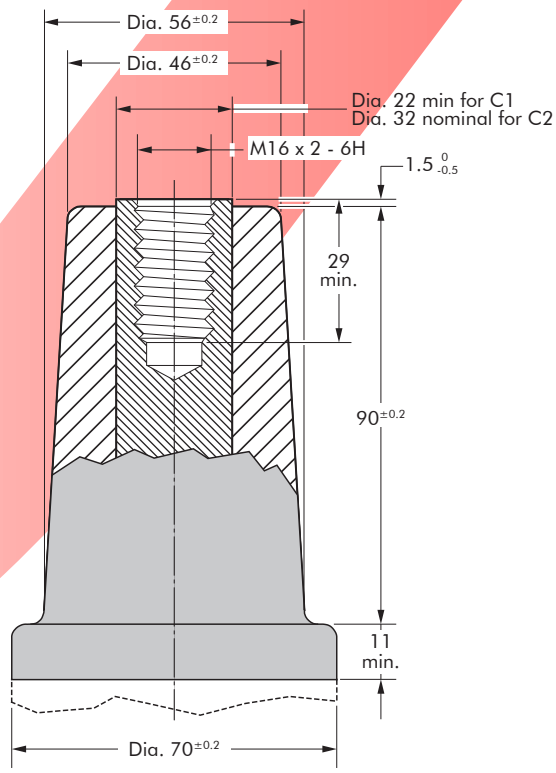

While every care is taken to ensure that the information contained in this publication is correct, no legal responsibility can be accepted for any inaccuracy. Nexans Network Solutions N.V. - Div. Euromold reserves the right to alter or modify the characteristics of its products described in this catalogue as standards and technology evolve.

CONNECTING POSSIBILITIES

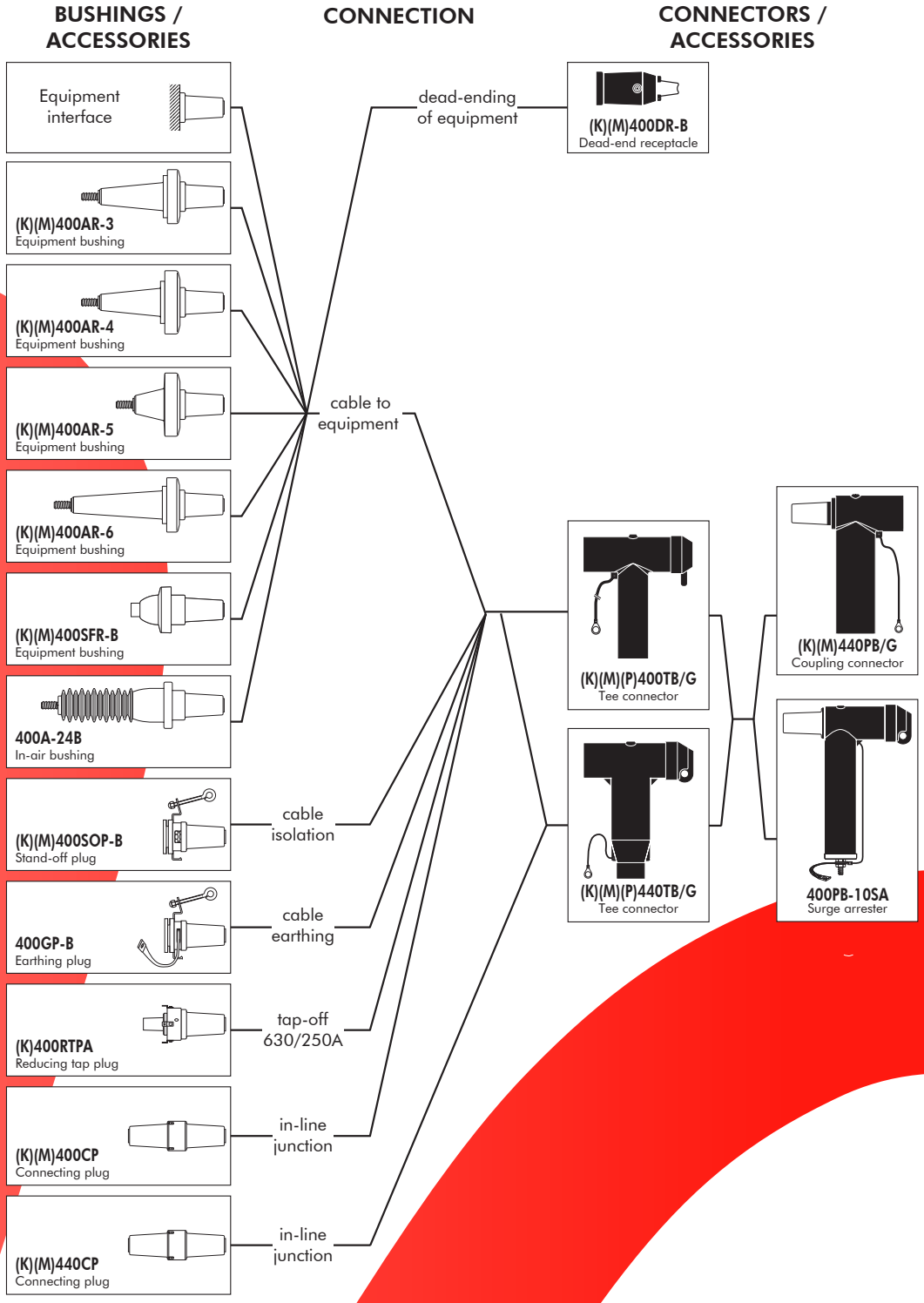

For information on bushings please refer to our bushing catalogue.

Made in Europe since 50 years

EUROMOLD separable connectors are made in Europe using only high-quality material such as EPDM rubber. Each product is tested according to CENELEC standards to ensure long-lasting quality.

Compact & flexible design

The compact design of separable connectors uses less raw material and limits sub packaging. It also facilitates installation in reduced space equipment configuration. The ability to combine connectors for most interfaces offers flexibility in the design of your installation.

Reliable

EUROMOLD connectors have a proven track record of high reliability and performance in medium & low high voltage applications. Each separable connector is made with high quality components in Europe and individually tested before leaving the plant, ensuring a reliable connection.

Easy to install & safe

Make your job easier with Nexans separable connectors. They can easily be installed & removed, when de-energized without specific tools, and safely, thanks to high quality EPDM rubber inner and outer jackets, ensuring a long-lasting protection even in harsh environmental conditions.

All-in-one solution

EUROMOLD's separable connectors fit every projects with their different shapes available for a wide range of cross sections taking GPH lugs and cable adaptors, limiting complexity and therefore stock, for all interfaces from A to F.

400TB

INTERFACE C
TEE CONNECTOR

APPLICATION

Separable tee shape connector designed to connect polymeric insulated cable to equipment (transformers, switchgear, motors, ...).
Also connects cable to cable when using the appropriate mating parts.

TECHNICAL CHARACTERISTICS

- A thick conductive EPDM jacket provides a total safe to touch screen.
- Each separable connector is tested for AC withstand and partial discharge prior to leaving the factory.

DESIGN

Separable connector comprising:

1. Conductive EPDM insert.
2. Conductive EPDM jacket.
3. Insulating EPDM layer moulded between the insert and the jacket.
4. Type C interface as described by CENELEC EN 50180 and 50181.
5. Conductor contact.
6. Basic insulating plug.
7. Cable reducer.
8. Conductive rubber cap.
9. Clamping screw.
10. Earthing lead.

The screen break design enables cable outer sheath testing without removing or dismantling the connector.

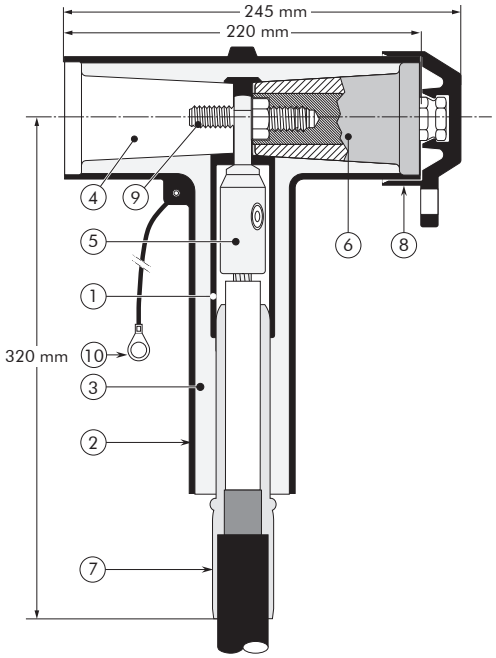

6/10 (12) kV
6.35/11 (12) kV
8.7/15 (17.5) kV
12/20 (24) kV
12.7/22 (24) kV
18/30 (36) kV
19/33 (36) kV
20.8/36 (42) kV

Up to 42 kV
630 A - 1250 A

EUROMOLD

SPECIFICATIONS AND STANDARDS

The 400TB separable connector meets the requirements of CENELEC HD 629.1.

Separable connector type	Voltage Um (kV)	Current Ir (A) When installed on C1 type bushing	Current Ir (A) When installed on C2 type bushing	Conductor sizes (mm^2)	
				min	max
400TB/G	12	630	1250	16	300
K400TB/G	24	630	1250	16	300
M400TB/G	36	630	1250	35	240
P400TB/G	42	630	1250	35	240

KIT CONTENTS

The complete (K)(M)(P)400TB/G tee connector kit comprises 3 x the following components:

The kit also comprises silicone grease, gloves, wipers, roll adhesive tape and installation instructions.

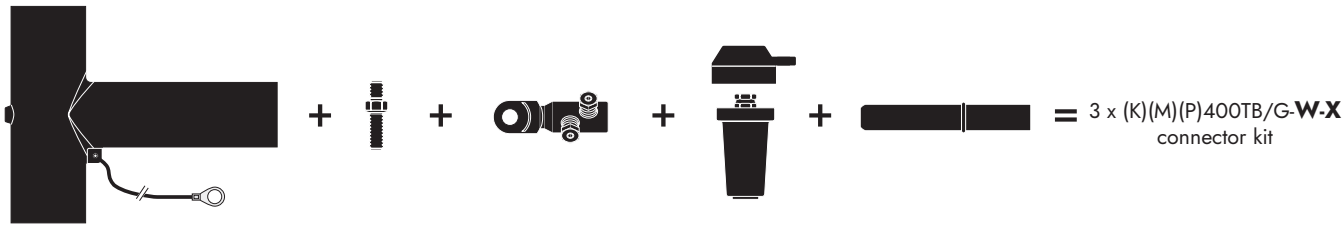

Connector housing (K)(M)(P)400BT/G

Clamping screw 400TCS

Conductor contact TMBC-**X**

Basic insulating plug (K)(M)(P)400BIPA + rubber cap

Cable reducer CA0-**W**

ORDERING INSTRUCTIONS

To order the correct tee connector kit, select the ordering part number from table W which gives you the best centring of your core insulation diameter and substitute **X** using table X, according to your conductor size and type.
Add a 'K' for use up to 24 kV, add an 'M' for use up to 36 kV, add a 'P' for use up to 42 kV.

EXAMPLE:

The cable is 24 kV (Um), 185 mm^2 compact stranded copper with a diameter over core insulation of 27.5 mm.
Order a 3 x K400TB/G-018-95.300UN5 tee connector kit.

TABLE W

Ordering part number	Dia. over core insulation (mm)	
	min	max
3 x 400TB/G-011-X	12.0	19.0
3 x 400TB/G-015-X	16.0	26.5
3 x 400TB/G-018-X	19.0	32.6
3 x 400TB/G-021-X	22.0	34.6
3 x 400TB/G-027-X	28.5	37.5

TABLE X

Conductor sizes (mm^2)	Aluminium and copper conductor	
	Bolted	
16	16.95UN5	
25		
35		
50		
70		
95		95.300UN5
120		
150		
185		
240		
300		

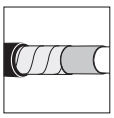

For use with copper tape screened cables. Order: Kit MT.

For use with other cable types. Please contact our representative.

For applications outdoors and in humid climate. Order: +MWS.

For use in potentially explosive atmospheres (for 12 kV max). Order: ATEX-IECEx

Components can be ordered individually.

440TB

INTERFACE C
TEE CONNECTOR

APPLICATION

Separable tee shape connector (bolted type) designed to connect polymeric insulated cable to equipment (transformers, switchgear, motors, ...).
Also connects cable to cable when using the appropriate mating parts.

TECHNICAL CHARACTERISTICS

- The thick conductive EPDM jacket provides a total safe to touch screen which ensures safety for personnel.
- Each separable connector is tested for AC withstand and partial discharge prior to leaving the factory.

DESIGN

Separable connector comprising:

1. Conductive EPDM insert.
2. Conductive EPDM jacket.
3. Insulating EPDM layer moulded between the insert and the jacket.
4. Type C interface as described by CENELEC EN 50180 and 50181.
5. Conductor contact.
6. Basic insulating plug (with VD point).
7. Cable reducer.
8. Conductive rubber cap.
9. Clamping screw.
10. Earthing lead.

The screen break design enables cable outer sheath testing without removing or dismantling the connector.

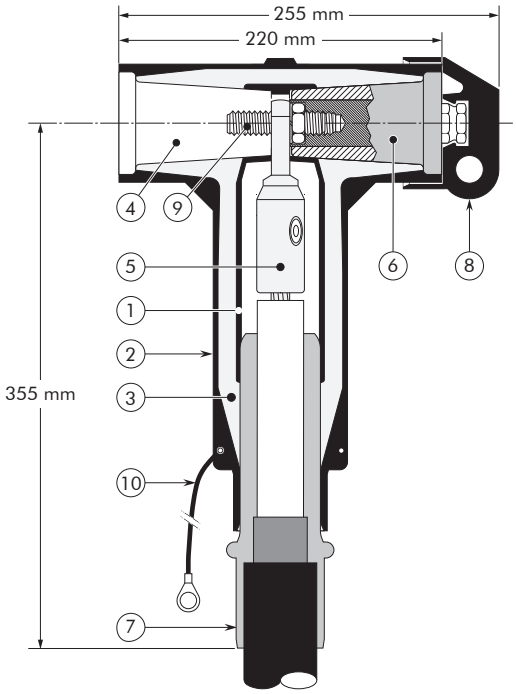

6/10 (12) kV
6.35/11 (12) kV
8.7/15 (17.5) kV
12/20 (24) kV
12.7/22 (24) kV
18/30 (36) kV
19/33 (36) kV
20.8/36 (42) kV

Up to 42 kV
630 A - 1250 A

EUROMOLD

SPECIFICATIONS AND STANDARDS

The 440TB separable connector meets the requirements of CENELEC HD 629.1.

Separable connector type	Voltage Um (kV)	Current Ir (A) When installed on C1 type bushing	Current Ir (A) When installed on C2 type bushing	Conductor sizes (mm^2)	
				min	max
440TB/G	12	630	1250	185	630
K440TB/G	24	630	1250	185	630
M440TB/G	36	630	1250	185	630
P440TB/G	42	630	1250	185	630

KIT CONTENTS

The complete (K)(M)(P)440TB/G tee connector kit comprises the following components:

The kit also comprises silicone grease, gloves, wipers, roll adhesive tape and installation instructions.

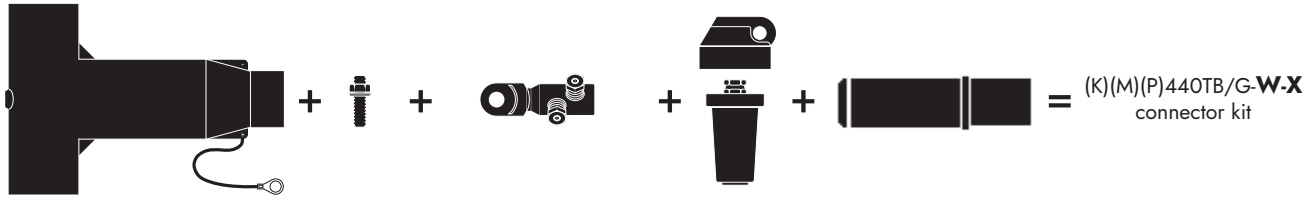

Connector housing (K)(M)(P)440BT/G

Clamping screw 400TCS

Conductor contact TMBC-**X**

Basic insulating plug (K)(M)(P)400BIPA + rubber cap

Cable reducer CA4-**W**

ORDERING INSTRUCTIONS

To order the correct tee connector kit, select the ordering part number from table W which gives you the best centring of your core insulation diameter and substitute **X** using table X, according to your conductor size and type.
Add a 'K' for use up to 24 kV, add an 'M' for use up to 36 kV, add a 'P' for use up to 42 kV.

EXAMPLE:
The copper wire screened cable is 36 kV (Um), 400 mm2 stranded aluminium with a diameter over core insulation of 42.4 mm.
Order 3 x M440TB/G-S-4-37-400.630UN5 tee connector kit.

TABLE W

Ordering part number	Dia. over core insulation (mm)	
	min	max
440TB/G-4-22-**X**	23.5	31.0
440TB/G-4-27-**X**	28.5	37.5
440TB/G-4-32-**X**	34.0	42.5
440TB/G-4-37-**X**	39.0	48.5
440TB/G-4-43-**X**	43.5	55.0

TABLE X

Conductor sizes (mm^2)	Aluminium and copper conductor	
	Bolted	
185	185.400UN5	
240		
300		400.630UN5
400		
500		
630		

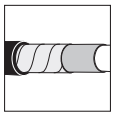

For use with copper tape screened cables. Order: Kit MT.

For use with other cable types. Please contact our representative.

For applications outdoors and in humid climate. Order: +MWS.

For use in potentially explosive atmospheres (for 12 kV max). Order: ATEX-IECEx

Components can be ordered individually.

440PB

COUPLING CONNECTOR FOR 400TB AND 440TB

APPLICATION

Separable coupling connector (bolted type) for dual cable arrangement. It has been designed to be used with 400TB and 440TB separable tee connector.

TECHNICAL CHARACTERISTICS

- A thick conductive EPDM jacket provides a total safe to touch screen.
- Each separable connector is tested for AC withstand and partial discharge prior to leaving the factory.

DESIGN

1. Interface designed to fit 400TB/440TB connector.
2. Contact rod for 440PB.
3. Conductive EPDM insert.
4. Insulating EPDM layer moulded between the insert and the jacket.
5. Conductive EPDM jacket.
6. Conductive EPDM cap.
7. Basic insulating plug.
8. Conductor contact.
9. Cable reducer.
10. Earthing lead.
11. Threaded M16 stud for the equipment bushing.

The screen break design enables cable outer sheath testing without removing or dismantling the connector.

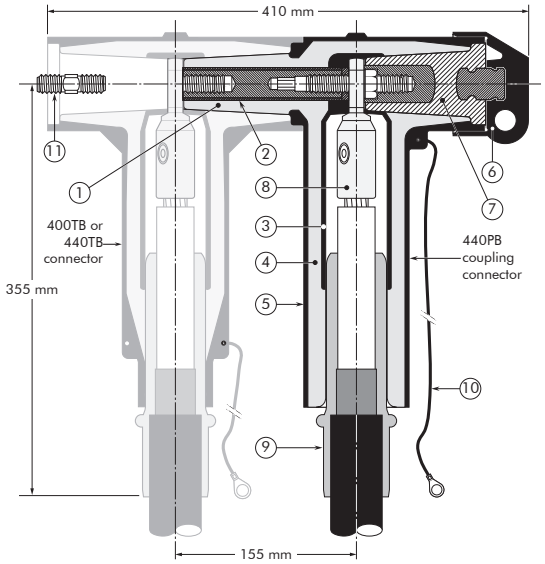

6/10 (12) kV
6.35/11 (12) kV
8.7/15 (17.5) kV
12/20 (24) kV
12.7/22 (24) kV
18/30 (36) kV
19/33 (36) kV
20.8/36 (42) kV

Up to 42 kV
800 A

EUROMOLD

SPECIFICATIONS AND STANDARDS

The 440PB coupling connector meets the requirements of CENELEC HD 629.1.

Separable connector type	Voltage Um (kV)	Current Ir (A)	Conductor sizes (mm²)	
			min	max
440PB/G	12	800	185	630
K440PB/G	24	800	185	630
M440PB/G	36	800	185	630
P440PB/G	42	800	185	630

KIT CONTENTS

The complete (K)(M)(P)440PB/G coupling connector kit comprises 3 x the following components:

The kit also comprises silicone grease, installation rod, installation instructions and crimp chart.

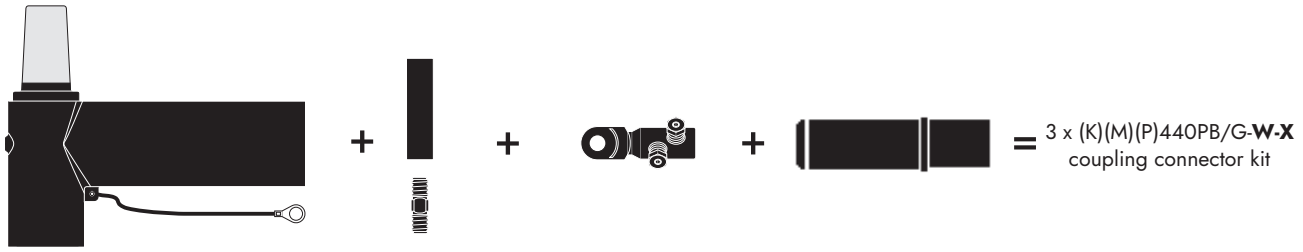

Connector housing (K)(M)(P)440BP/G

Contact rod 440PB-CR + M16 stud

Conductor contact TMBC-**X**

Cable reducer CA4-**W**

ORDERING INSTRUCTIONS

To order the correct coupling connector kit, select the ordering part number from table W which gives you the best centring of your core insulation diameter and substitute **X** using table X, according to your conductor size and type.
Add a 'K' for use up to 24 kV, add an 'M' for use up to 36 kV, add a 'P' for use up to 42 kV.

EXAMPLE:
The copper wire screened cable is 36 kV (Um), 240 mm2 stranded aluminium with a diameter over core insulation of 37.0 mm.
Order 3 x M440PB/G-4-32-240(K) M-12-2 coupling connector kit.

TABLE W

Ordering part number	Dia. over core insulation (mm)	
	min	max
3 x 440PB/G-4-22-**X**	23.5	31.0
3 x 440PB/G-4-27-**X**	28.5	37.5
3 x 440PB/G-4-32-**X**	34.0	42.5
3 x 440PB/G-4-37-**X**	39.0	48.5
3 x 440PB/G-4-41-**X**	43.5	55.0

TABLE X

Conductor sizes (mm^2)	Aluminium and copper conductor	
	Bolted	
185	185.400-14-5	
240		
300		400.630-14-5
400		
500		
630		

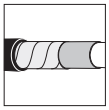

For use with copper tape screened cables. Order: Kit MT.

For use with fabric tape (graphite) screened cables. Order additional semi-conductive tape (type TSC).

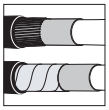

For use with easy strip semi-conductive screened cables. Order: Field control mastic (type MFC).

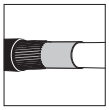

For use with copper wire screened cables. No earthing device is necessary.

For use with other cable types. Please contact our representative.

For outdoor applications. Order: +MWS.

400PB-10SA

INTERFACE C SURGE ARRESTER

APPLICATION

Surge arrester designed to protect medium voltage components, including transformers, equipment, cable and accessories from high voltage surges resulting from lightning or switching.

DESIGN

Surge arrester comprising:

1. Conductive EPDM insert.
2. Conductive EPDM jacket.
3. Insulating EPDM layer moulded between the insert and the jacket.
4. Contact rod.
5. Earthing lead.
6. Earth connection.
7. Steel cap.
8. Metal oxide valve elements.
9. Type C interface as described by CENELEC EN 50180 and 50181.

SPECIFICATIONS AND STANDARDS

- The 400PB-10SA surge arresters meet the test requirements of IEC 60099-4.
- Station class (SL); Qrs = 1.0 As
- Energy absorption 4.0 kJ/kV_Ur

TECHNICAL CHARACTERISTICS

- This surge arrester is a metal oxide varistor surge arrester in an elbow configuration.
- Each arrester is tested for AC withstand, partial discharge and critical voltage prior to leaving the factory.

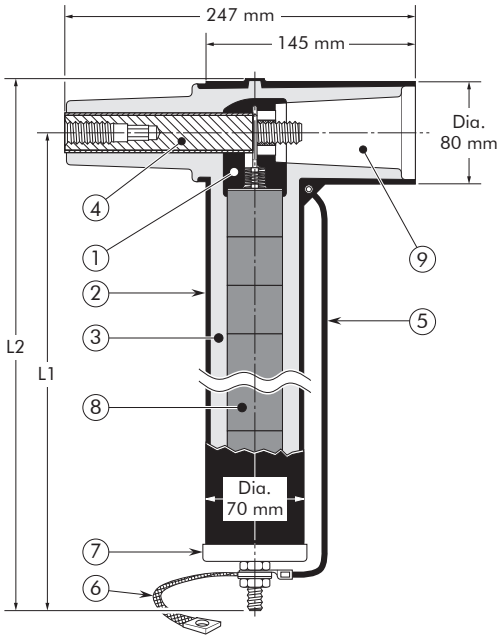

6/10 (12) kV
6.35/11 (12) kV
8.7/15 (17.5) kV
12/20 (24) kV
12.7/22 (24) kV
18/30 (36) kV
19/33 (36) kV
20.8/36 (42) kV

Up to 42 kV

EUROMOLD

Surge arrester type	Nominal discharge current In (kA)	Rated voltage Ur (kV)	Max. continuous operating voltage Uc (kV)	Dimensions (mm) (indicative)	
				L1	L2
400PB-10SA-6N	10	6	4.8	270	310
400PB-10SA-9N	10	9	7.2	270	310
400PB-10SA-12N	10	12	9.6	270	310
400PB-10SA-15N	10	15	12	270	310
400PB-10SA-18N	10	18	14.4	270	310
400PB-10SA-22N	10	22	17.6	270	310
400PB-10SA-24N	10	24	19.2	370	410
400PB-10SA-27.5N	10	27.5	22	370	410
400PB-10SA-30N	10	30	24	370	410
400PB-10SA-33N	10	33	26.4	370	410
400PB-10SA-36N	10	36	28.8	370	410
400PB-10SA-40N	10	40	32	470	510
400PB-10SA-42N	10	42	33.6	470	510
400PB-10SA-45N	10	45	36	470	510
400PB-10SA-51N	10	51	40.8	470	510

TYPICAL APPLICATIONS AND DIMENSIONS

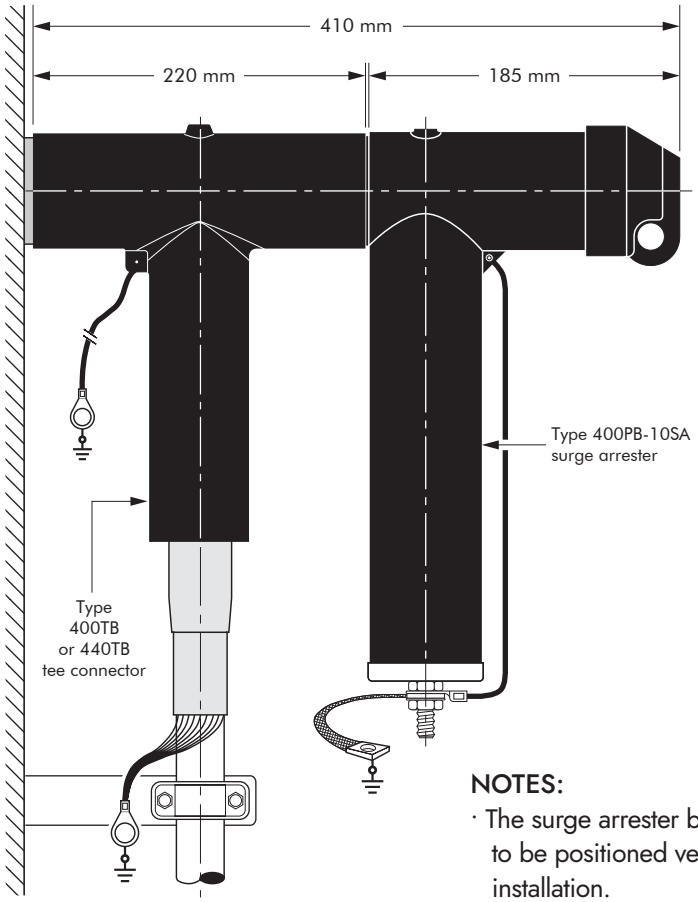

NOTES:

- The surge arrester body needs to be positioned vertically after installation.
- Prior to cable testing, the surge arrester shall be removed.

ORDERING INSTRUCTIONS

To order the surge arrester, specify the surge arrester type, as described on previous page.

EXAMPLE:
For a maximum continuous operating voltage (r.m.s.) of 24 kV and a nominal discharge current of 10 kA.
Order a 400PB-10SA-30N surge arrester.

TECHNICAL DATA

Surge arrester type	Steep current residual voltage @ 10 kA [1/20 µs] (kV)	Lightning current residual voltage [8/20 µs] (kV)			Switching impulse residual voltage [36/90 µs] (kV)		High current impulse withstand (kA)
		@ 5 kA	@ 10 kA	@ 20 kA	@ 125 A	@ 500 A	
400PB-10SA-6N	18.5	16.2	17.2	19.3	12.6	13.2	100
400PB-10SA-9N	26.3	23	24.5	27.5	18.1	19.1	100
400PB-10SA-12N	36.3	31.5	33.6	37.1	25.1	26.5	100
400PB-10SA-15N	45.3	39.4	42	46.4	31.4	33.1	100
400PB-10SA-18N	54.4	47.3	50.4	56.4	37.7	39.7	100
400PB-10SA-22N	66.5	57.8	61.6	68.1	46	48.5	100
400PB-10SA-24N	72.5	63	67.2	75.2	50.2	53	100
400PB-10SA-27.5N	81.6	71	75.6	85	56.5	59.6	100
400PB-10SA-30N	90.7	78.8	84	94	62.8	66.2	100
400PB-10SA-33N	99.7	86.7	92.4	102.1	65	68.5	100
400PB-10SA-36N	108.8	94.5	100.8	112.7	75.3	79.4	100
400PB-10SA-40N	120.9	105.1	112	123.8	83.7	88.3	100
400PB-10SA-42N	126.9	110.3	117.6	130	87.9	92.7	100
400PB-10SA-45N	136	118.2	126	139.3	94.2	99.3	100
400PB-10SA-51N	154.1	134	142.8	160.4	106.7	112.5	100

400TR

TEST ROD

APPLICATION

- The test rod can be used for:
  - cable fault location
  - cable testing
  - phasing checks, etc.
- Connections can be made with a cable lug, a 4 mm plug or spring clips.
- The test rod is not suitable for PD (partial discharge) measurements.

TECHNICAL CHARACTERISTICS

- The 400TR test rod can be used with 400TB and 440TB connectors.

DESIGN

1. Insulating shroud.
2. Threaded rod for test connection.
3. Two nuts M12.
4. Insulation.
5. Test rod stem.

An insulating shroud is provided to allow the application of test voltages when bushings are closely spaced.

400TR

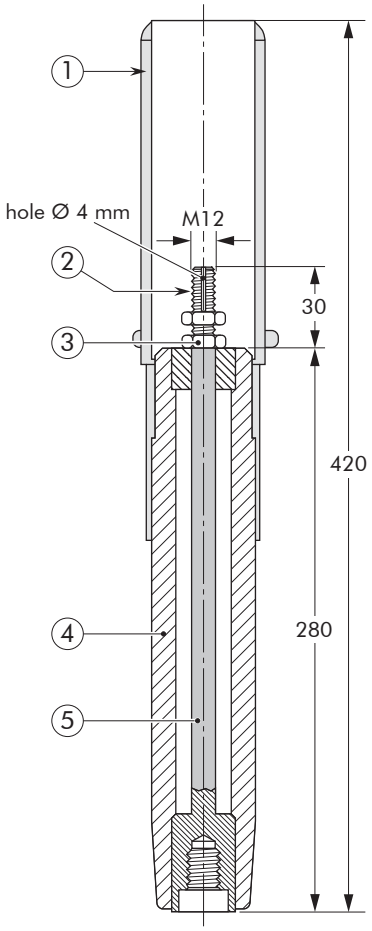

In mm.

INSTALLATION

The test rod is mounted on to the clamping screw in the type C interface tee and coupling connectors. The test cable is connected to the threaded stem and the insulating shroud moved to its final position over the end of the test rod.

ORDERING INSTRUCTIONS

Simply specify: 400TR.

Test rod type	Maximum A.C. test voltage (2 x U_0 - 5 min)	Maximum D.C. test voltage (30 min)	Maximum impulse voltage (1.2 x 50 µs)	Maximum VLF test voltage (3 x U_0 - 60 min)
400TR	up to 42 kV	96 kV	95 kV	up to 63 kV

400TK AND 400SW

INSTALLATION TOOL

APPLICATION

- The box spanner and box spanner key are designed to facilitate assembly of 400TE, 400TB and 440TB connectors.
- The 400TK box spanner is used to install the 400TEF clamping pin contact or 400TCS clamping screw.
- The 400SW box spanner key fits on the hex nut of the 400BIPA basic insulating plug.

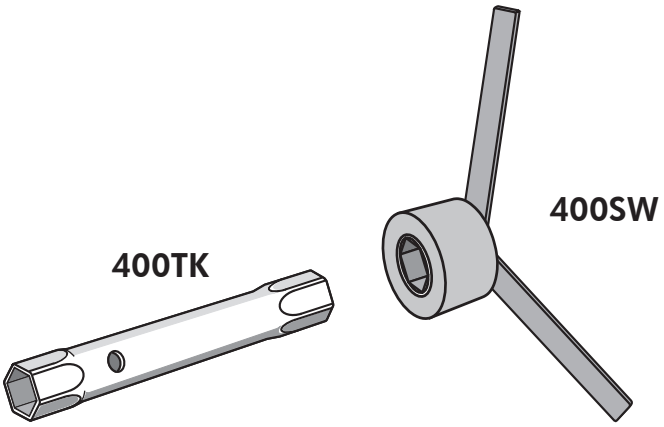

ORDERING INSTRUCTIONS

Simply specify:
- 400TK box spanner
- 400SW box spanner key.

ACCESSORIES

APPLICATION
For use with connectors and bushings with an interface C as described by CENELEC EN 50180 and 50181.

TECHNICAL CHARACTERISTICS
All these products, except the earthing plugs, are tested for AC withstand and partial discharge prior to leaving the factory.

6/10 (12) kV
6.35/11 (12) kV
8.7/15 (17.5) kV
12/20 (24) kV
12.7/22 (24) kV
18/30 (36) kV
19/33 (36) kV
20.8/36 (42) kV

400DR-B/G DEAD-END RECEPTACLE
Fits over a bushing with a type C interface to provide 'dead-end' facility. The dead-end receptacle is supplied with an earth lead.

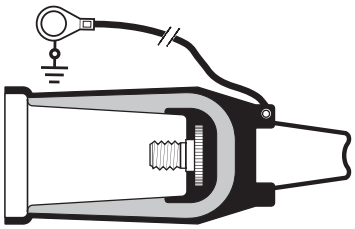

ORDERING INSTRUCTIONS
Order
400DR-B/G for 12 kV,
K400DR-B/G for 24 kV or
M400DR-B/G for 36 kV
applications.

400SOP-B STAND-OFF PLUG
Is designed to support and 'dead-end' connectors with a type C interface when removed from equipment.

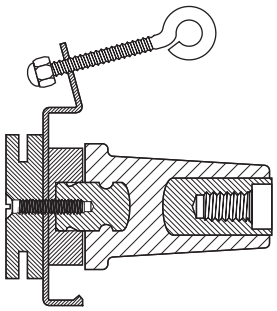

ORDERING INSTRUCTIONS
Order
400SOP-B for 12 kV,
K400SOP-B for 24 kV,
M400SOP-B for 36 kV or
P400SOP-B for 42 kV
applications.

400GP-B EARTHING PLUG
Is designed to support and earth connectors with a type C interface when removed from equipment.

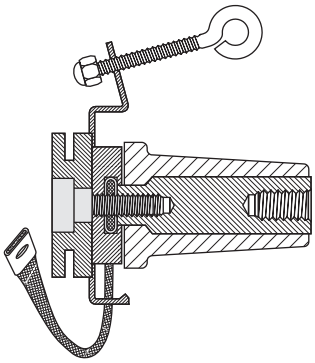

ORDERING INSTRUCTIONS
Order
400GP-B for 12, 24, 36 or 42 kV applications.

400BIPA BASIC INSULATING PLUG
Acts as a tightening nut for the 400TB and 440TB tee connector kits.
The plug contains a voltage detection point.
The conductive rubber protection cap is included.

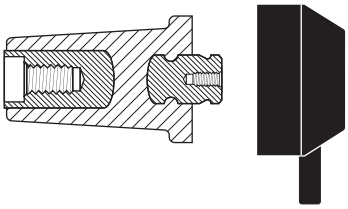

ORDERING INSTRUCTIONS
Order
400BIPA for 12 kV,
K400BIPA for 24 kV
M400BIPA for 36 kV or
P400BIPA for 42 kV
applications.

400CP CONNECTING PLUG

For connecting two or more connectors with a type C interface together, thus creating a separable cable joint.

For use up to 630 A.

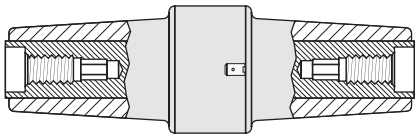

ORDERING INSTRUCTIONS

Order
400CP for 12 kV,
K400CP for 24 kV or
M400CP for 36 kV
applications.

440CP CONNECTING PLUG

For connecting two or more connectors with a type C interface together, thus creating a separable cable joint.

For use up to 1250 A.

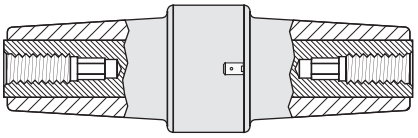

ORDERING INSTRUCTIONS

Order
440CP for 12 kV,
K440CP for 24 kV or
M440CP for 36 kV
applications.

Order (K)(M)440CP + 676SA stud for connection to an already installed connector.

400RTPA REDUCING TAP PLUG

Provides a type A interface to connectors with a type C interface. A 'C' spanner, 600SW, is used to tighten the reducing tap plug on to its mating part.

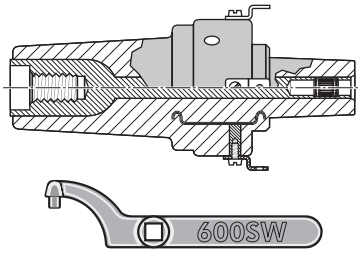

ORDERING INSTRUCTIONS

Order
400RTPA for 12 kV or
K400RTPA for 24 kV
applications.

Order 600SW for the 'C' spanner.

KIT MT EARTHING KIT FOR COPPER TAPE SCREENED CABLES

Contains a tinned copper braid (25 mm² - L = 500 mm), a tinned copper wire for cleating and some water sealing mastic.

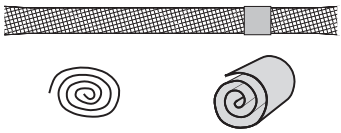

ORDERING INSTRUCTIONS

Order
Kit MT for 12 kV, 24 kV
36 kV or 42 kV applications.

400BE/G BUSHING EXTENDER

Provides an extension piece to allow cables to stand away from equipment.
Is used in conjunction with the 400CP, 440CP or 440PB. The bushing extender is supplied with an earth lead.

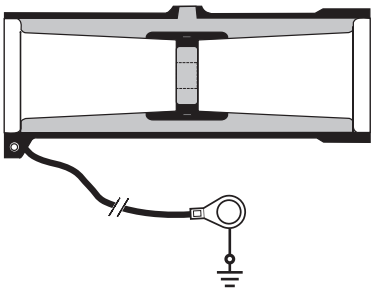

ORDERING INSTRUCTIONS

Order 400BE/G for 12 kV,
K400BE/G for 24 kV,
M400BE/G for 36 kV or
P400BE/G for 42 kV
applications.

POSSIBLE ARRANGEMENTS

400TB/G

Single cable arrangement.
Order 400TB/G for 12 kV,
K400TB/G for 24 kV,
M400TB/G for 36 kV or
P400TB/G for 42 kV applications.

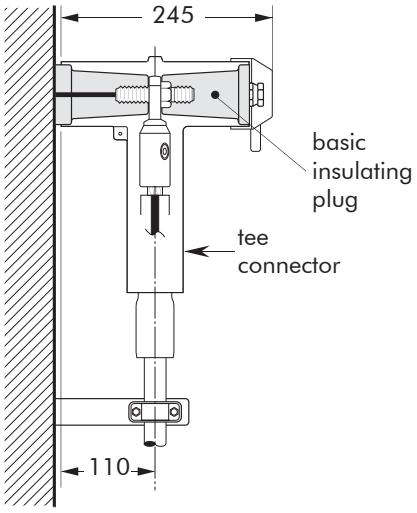

400TB/G-P2

Dual cable arrangement.
Order 400TB/G-P2 for 12 kV,
K400TB/G-P2 for 24 kV or
M400TB/G-P2 for 36 kV

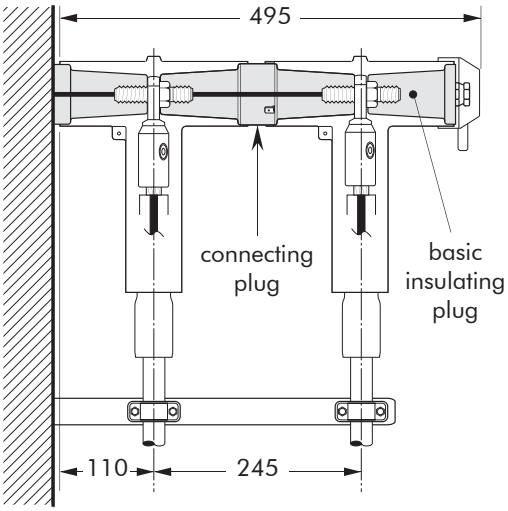

400TB/G-L2

2-way connection.
Order 400TB/G-L2 for 12 kV,
K400TB/G-L2 for 24 kV or
M400TB/G-L2 for 36 kV
applications.

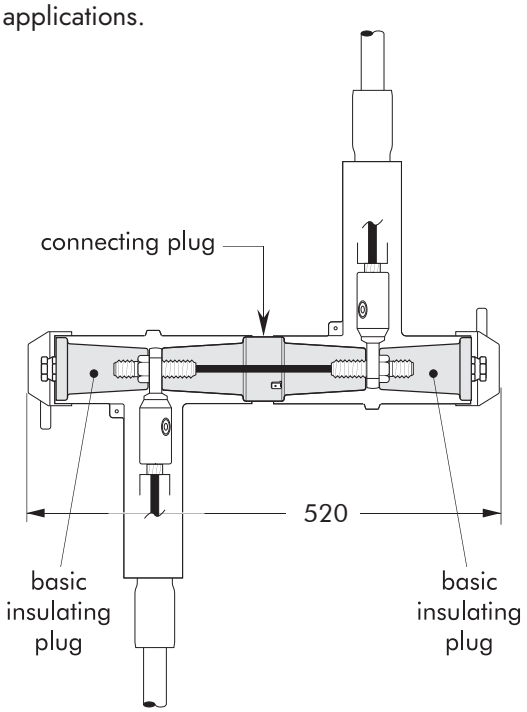

400BE+440PB

Connector standing away from equipment.
Order 400BE+440PB for 12 kV,
K400BE+440PB for 24 kV,
M400BE+440PB for 36 kV or
P400BE+440PB for 42 kV
applications.

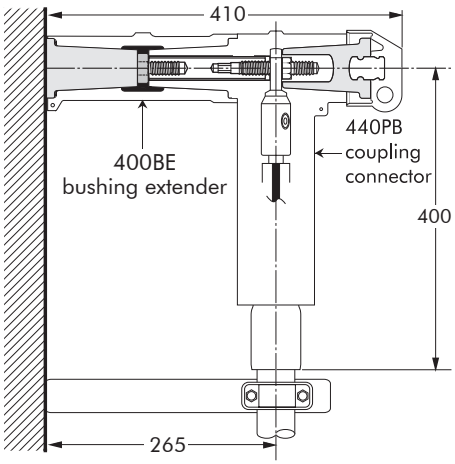

In mm.

400TB/G-L3

3-way connection.
Order 400TB/G-L3 for 12 kV,
K400TB/G-L3 for 24 kV or
M400TB/G-L3 for 36 kV

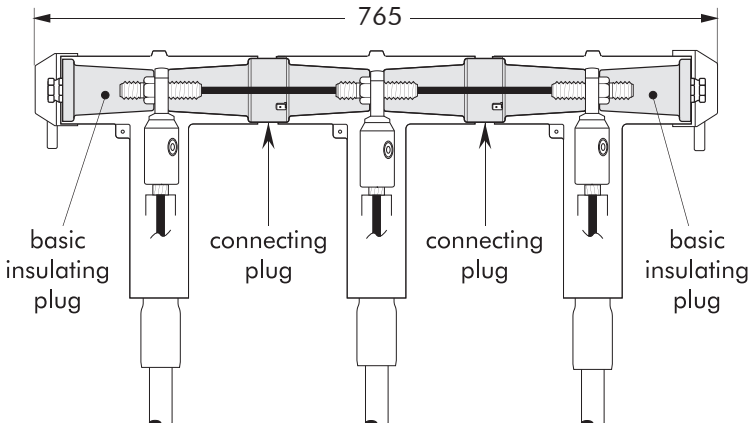

400TB/G-L4

4-Way connection.
Order 400TB/G-L4 for 12 kV,
K400TB/G-L4 for 24 kV or
M400TB/G-L4 for 36 kV

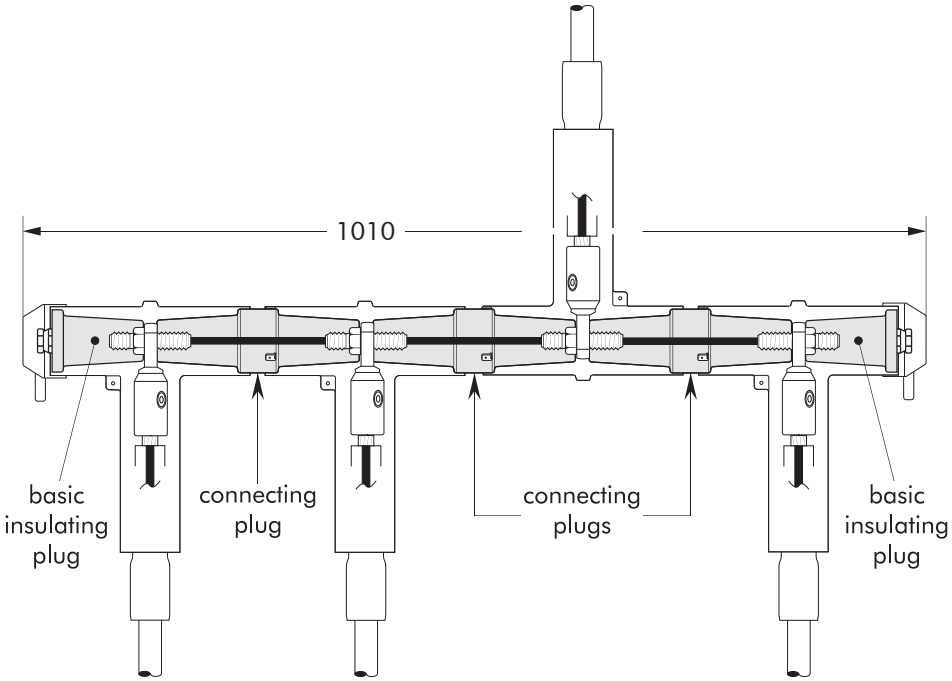

400TB/G+200LR

2-way connection with tap-off.
Order 400TB/G+200LR+ 400RTPA
for 12 kV or
K400TB/G +K200LR+K400RTPA
for 24 kV applications.

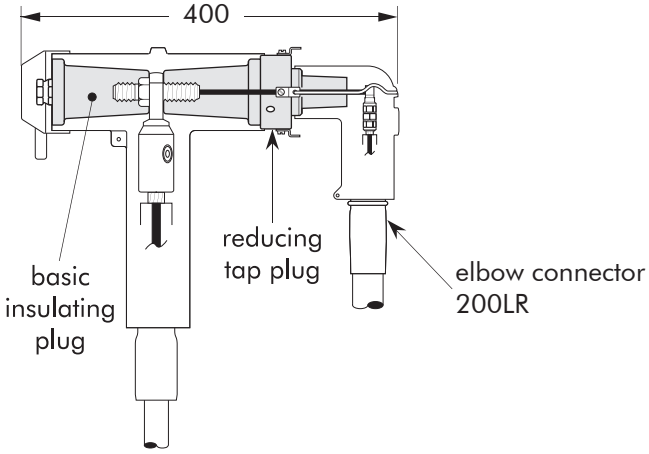

In mm.

440TB+440PB-P2

Dual cable arrangement.
Order 440TB/G+440PB/G-P2 for 12 kV, K440TB/G+K440PB/G-P2 for 24 kV, M440TB/G+M440PB/G-P2 for 36 kV or P440TB/G+P440PB/G-P2 for 42 kV applications.

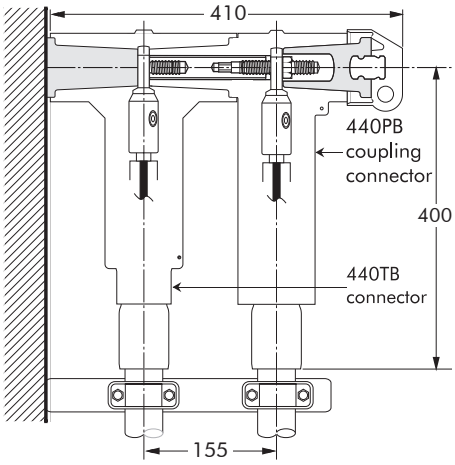

CONNECTOR ON STAND-OFF PLUG

Order 400SOP-B for 12 kV, K400SOP-B for 24 kV, M400SOP-B for 36 kV or P400SOP-B for 42 kV applications.

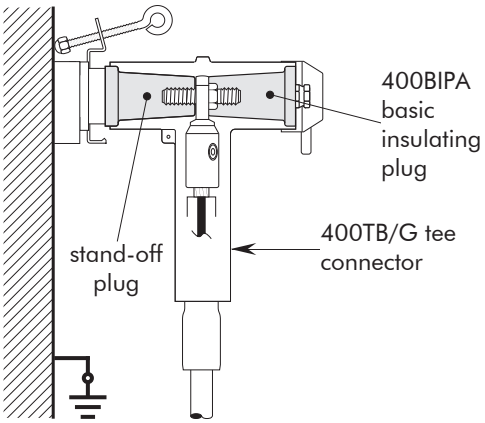

CONNECTOR ON EARTHING PLUG

Order 400GP-B for 12 kV, 24 kV, 36 kV and 42 kV applications.

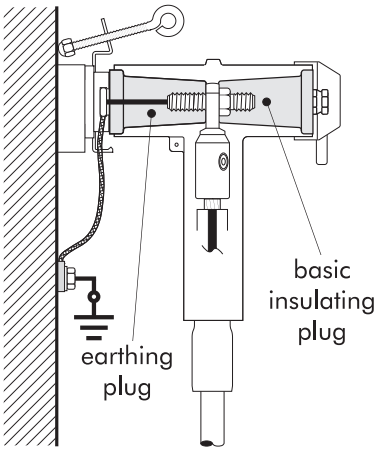

CABLE AND EQUIPMENT TESTING

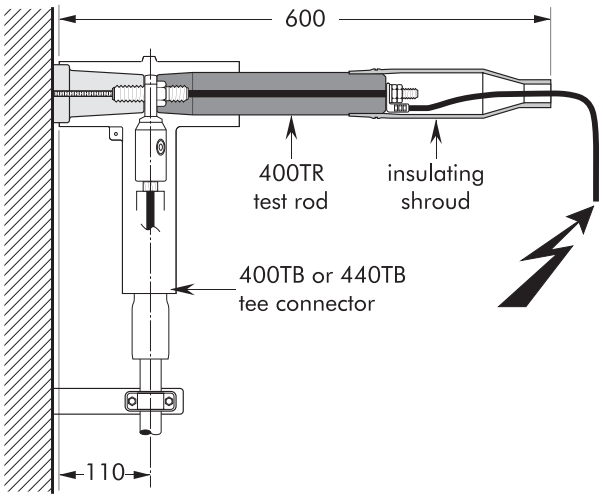

In mm.

About Nexans

For over a century, Nexans has played a crucial role in the electrification of the planet and is committed to electrifying the future. With approximately 28,500 people in 41 countries, the Group is paving the way to a new world of safe, sustainable and decarbonized electricity that is accessible to everyone. In 2023, Nexans generated 6.5 billion euros in standard sales. The Group is a leader in the design and manufacturing of cable systems and services across four main business areas: Power Generation & Transmission, Distribution, Usage and Industry & Solutions. Nexans was the first company in its industry to create a Foundation supporting sustainable initiatives, bringing access to energy to disadvantaged communities worldwide. The Group is recognized on the CDP Climate Change A List as a global leader on climate action and has committed to Net-Zero emissions by 2050 aligned with the Science Based Targets initiative (SBTi).

Nexans. Electrify the future.

Nexans is listed on Euronext Paris, compartment A.
For more information, please visit www.nexans.com

—

Nexans Network Solutions NV - div. EUROMOLD

Nexans Network Solutions NV - div. EUROMOLD
Zuid III - Industrielaan 12
B-9320 EREMBODEGEM-AALST — BELGIUM
Tel: +32 (0)53/85 02 11
E-mail: sales.euromold@nexans.com
www.nexans.be/poweraccessories

Find out more about Nexans Power Accessories.

Nexans
ELECTRIFY THE FUTURE